| A100-36（41.4V 1.8A）Pb-Acid Battery Charger | | |
|---|---|---|
| **项目 Item** | **规格 Specification** | **备注 Remark** |
| **1.输入特性 Input** | | |
| 额定输入电压 Rating input voltage | 100~240Vac 50/60Hz | |
| 输入电压范围 Input voltage range | 90~264Vac | |
| 额定输入电流 Rating input current | 1.5Arms | Input:100V Output:Full load |
| 最大输入功率 Max input power | 100W | Input:100V Output:Full load |
| **2.输出特性 Output** | | |
| 空载输出电压 No load output voltage | DC41.4V | |
| 输出电压范围 Output voltage range | DC30.0~44.1V | |
| 适用电池 Suit with battery type | 36V Pb-Acid battery | |
| 恒定电流 Charging current | 1.8A ±10% | |
| 恒定电压 Charging voltage | DC44.1V ±0.9V | |
| 浮充电压 Floating charge voltage | DC41.4V ±0.6V | |
| 充电结束电流 Charge-end current | ≤0.3A±0.1A | |
| 定时器 Timer | 10小时 | |
| 最大输出功率 Max output power | 79.38W | |
| 纹波电压 Ripple voltage | ≤414mV | 满载 Full load |
| 充电指示灯 Charging LED | 红色Red:Charging | |
| | 绿色Green:Full charge or idle | |
| 输出短路保护 Shorted | 有Yes | |
| 输出反接保护 Reversed | 有Yes | |
| 效率 Efficiency | ≥87% | 满载 Full load @220V |
| **3.环境要求 Environment** | | |
| 工作温度 Operate temperature | -10 ~ +40℃ | |
| 工作湿度 Operate humidity | < +90% | 相对湿度 Relative humidity |
| 存储温度 Storage temperature | -40 ~ +70℃ | |
| 存储湿度 Storage humidity | 0 ~ +95% | 相对湿度 Relative humidity |
| 冷却方式 Cooling | 自然冷却 Natural | |
| 抗振动 Vibration resistance | 5MM/50HZ/600S | 非运行状况 Non-operating condition |
| 抗冲击 Impact resistance | 1 meter drop test 3 times | 非运行状况 Non-operating condition |
| **4.结构 Mechanical** | | |
| 重量 Weight | 400g | |
| 尺寸 Size | 170X70X41MM | 外壳尺寸Casing only |
| 接线端子 Connector | 按客户要求制定 Refer to order | |
| **5.安全特性 Safety** | | |
| 最大温升 Max. temperature rise | < 40℃ on casing | |
| 安全认证 Safety approval | CE/cTUVus/CCC/PSE | |
| 平均无故障时间 MTBF | 30000H | |
| 静电等级 ESD | 8.0KV | |
| 隔离耐电压 Hi-Pot Insulation | i/p to o/p: 3000V (1 min) | |

| CUSTOMER REV | REV | ZONE | DESCRIPTION | CHA BY/DATE | APP BY/DATE |
|---|---|---|---|---|---|
| | | | | | |

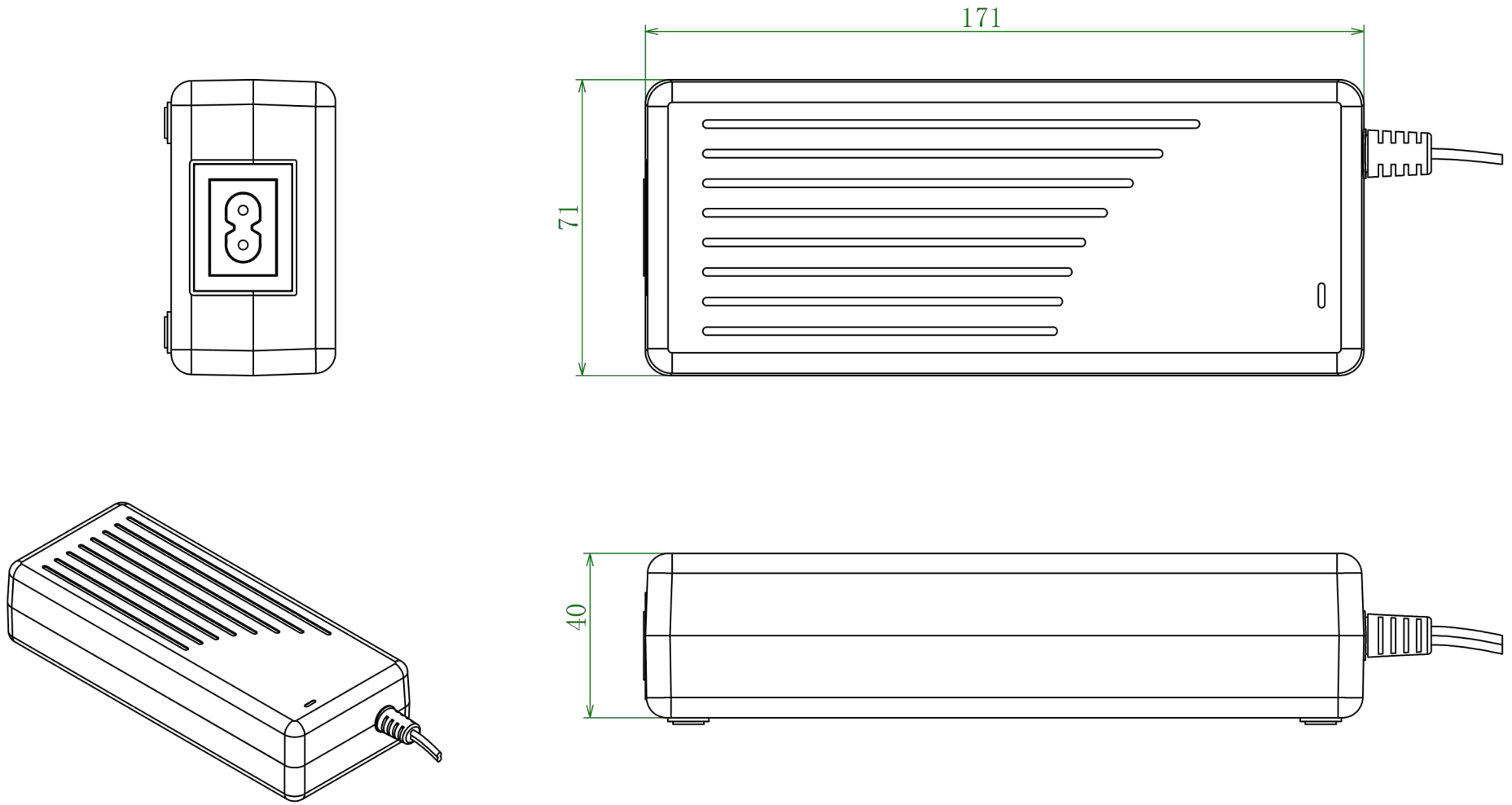


| | | | | | |
|---|---|---|---|---|---|
| 深圳市谷润数字电源有限公司 | | | | | |
| TITLE: | 100W | | | | MATL: |
| MODEL: | | | | | WEIGHT: |
| | | DES BY: | CAD FILE: | UNIT : mm | TEXTURE NO. |
| PART NO.: | | CHECK BY: | COLOR: | Paper Size:A4 | SCALE: Fit |
| CUSTOMER P/N: | | APP BY: | FINSH/ TREATMENT: | | DATE: |